Engine-driven Transfer Pumps

MH30-2 – 417212

Installation and Operation Manual



AUSTRALIAN EMISSIONS STANDARD APPROVED

HONDA AUSTRALIA APPROVED

POWERED by HONDA

1 YEAR WARRANTY COMPONENTS

3 YEAR WARRANTY ENGINE

1. Contents

1. Contents....2
2. Introduction....2
3. Warnings....3
4. Components....4
5. Technical Data....5
6. Preparation for use....6 - 9
7. Starting....9 - 10
8. Operation....11
9. Stopping....12
10. Tips for use....13
11. Maintenance....14
12. Storage....16
13. Troubleshooting....17
14. Warranty – General Understanding....19
15. Warranties – Terms and Conditions....20

2. Introduction

Thank you for purchasing a Water Master petrol-engined pump.

When you need to move water FAST, with its large 3" inlet and outlet and powered by a Honda GX160 petrol engine, the **MH30-2** is a great solution.

A sturdy rollover frame ensures easy portability and protection of this hardworking pump, making it a popular choice for industrial and agricultural applications.

Assembled in Australia utilising high quality parts, the compact MH30-2 is the perfect blend of light weight and high performance.

This manual will guide you through safe operation, routine maintenance, and basic troubleshooting to help you get the most from your pump.

3. Warnings

Symbol Meanings

	Warning – Potential consequences of use outside of intended application(s). Includes environmental condition warnings.
	Mandatory warning
	Read carefully

Specific Safety Information and Warnings

	Be sure that you are familiar with quick-stop procedures and control operation of this water pump.
	These pumps are designed to transfer clean water. Never attempt using this pump to deliver dirty water or slurry, or any flammable or corrosive liquids.
	This product is not intended for use by persons (including children) with reduced physical, sensory or mental capabilities, or lack of experience and knowledge, unless they have been given supervision or instruction concerning use of the appliance by a person responsible for their safety. Children should be supervised to ensure that they do not play with the product.
	Do not touch the muffler while the machine is working as it is hot. Only move the machine when it is stopped and has cooled down.
	When in operation, the exhaust from this machine contains poisonous carbon monoxide gas. Breathing this poison gas can lead to eventual death. Use this machine **only** outdoors in well-ventilated areas.
	To prevent fire hazards, keep at least 1 metre of clearance on all sides of this machine during operation.
	Running the pump without water or allowing the pump to run dry will damage the pump, voiding the warranty.

4. Components

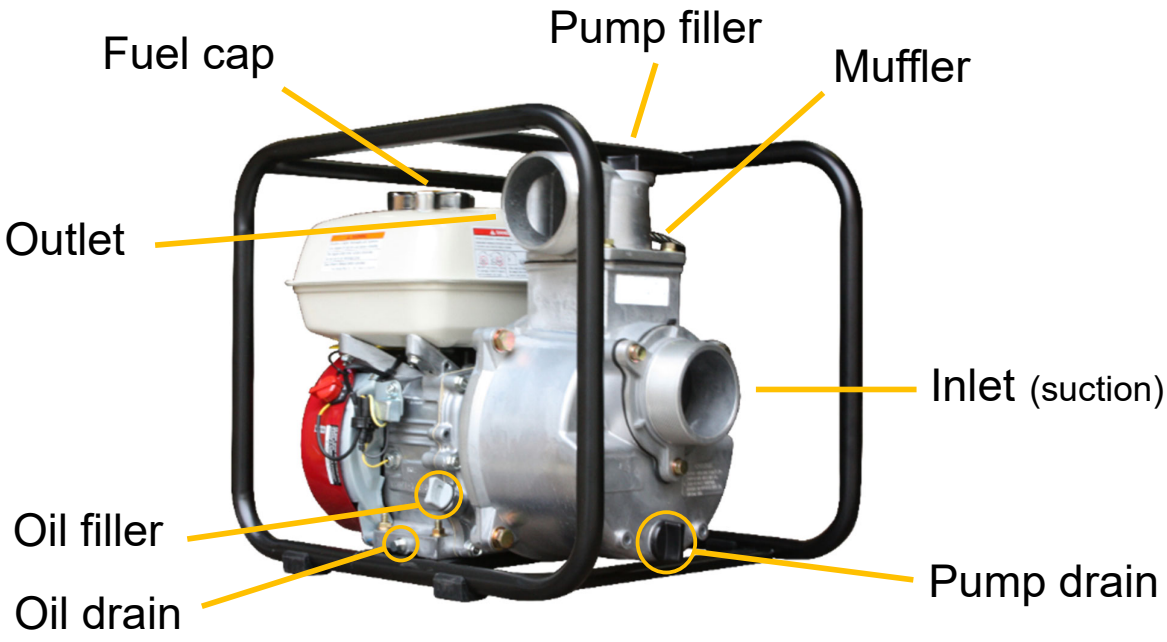

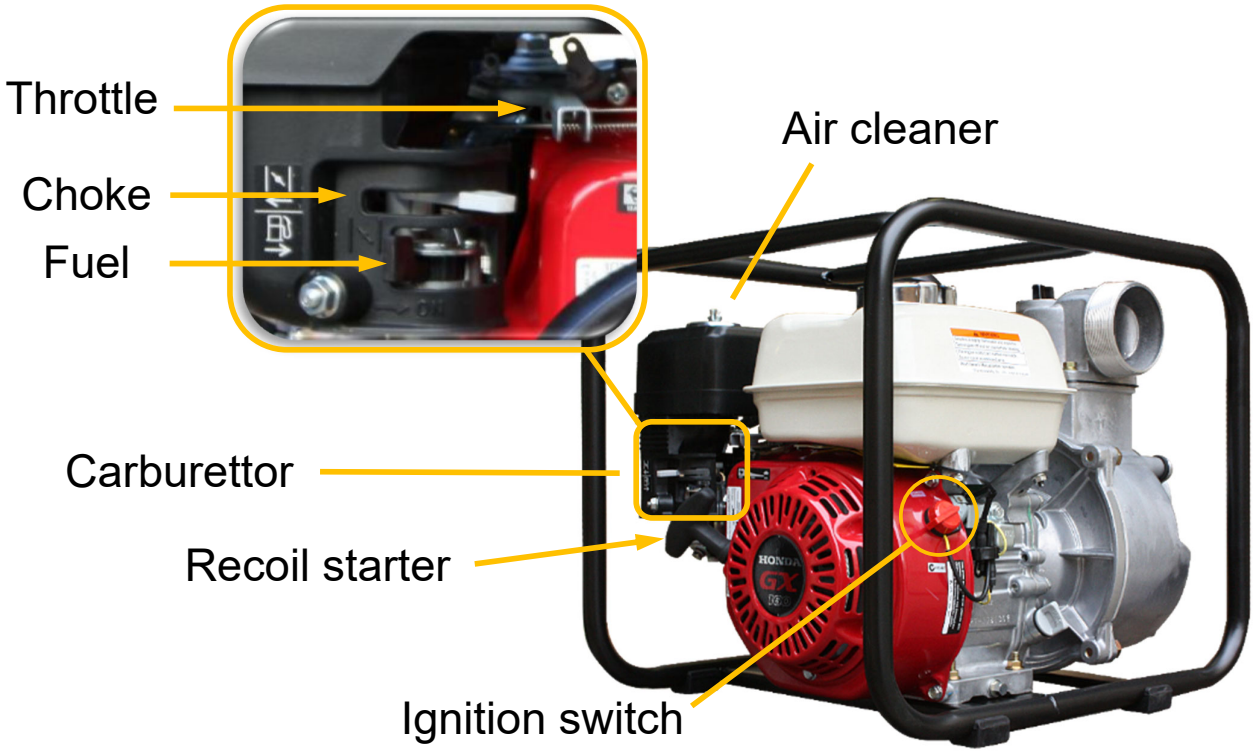

5. Technical Data

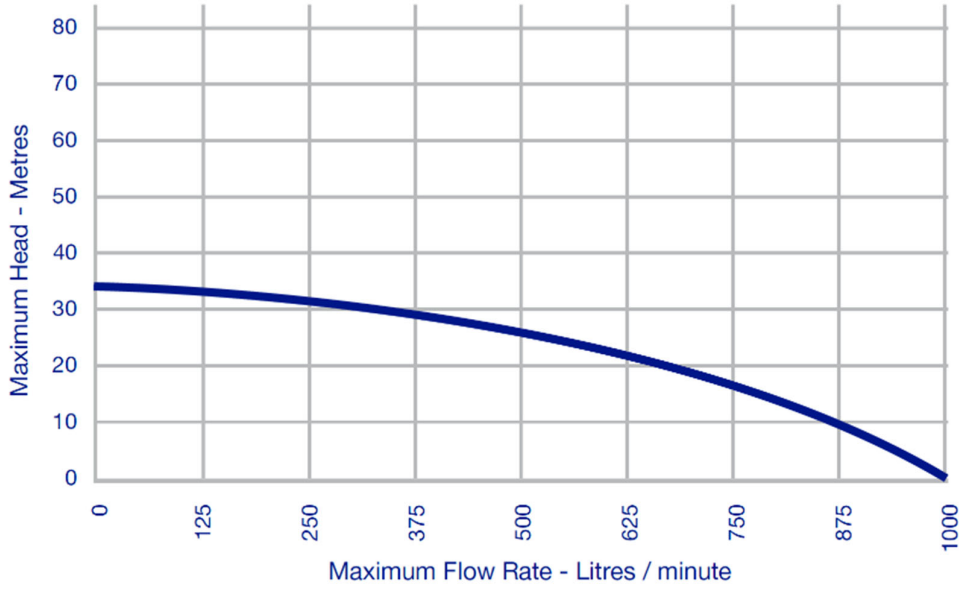

PUMP SPECIFICATIONS	
Model	**MH30-2**
Impeller Type	Single with semi-open channel
Max. Head (H_m)	32 m
Max. Flow (Q)	1000 L/min
Self-priming	Yes
Suction Port (Inlet)	3" BSPM
Discharge Port (Outlet)	3" BSPM
Liquid Type	Clear, fresh water with minimal solids or sediment
Water Temperature Range	2 – 35°C
Pump Body	Aluminium
Impeller Material	Aluminium
Mechanical Seal	Carbon / Ceramic / Nitrile
O-rings	Nitrile
Maximum ambient temperature	< 40°C
• Custom-engineered, easy-access roll frame that provides ongoing protection of the pump and engine	
Dry Weight	27 kg
Dimensions	520mm (L) x 370mm (W) x 420mm (H)

ENGINE SPECIFICATIONS	
Engine Type	Honda GX160 single cylinder, air-cooled, 4-stroke OHV
Horsepower (Gross)	5.0 HP
Displacement	163 cc
Air Cleaner	Dual element, paper and foam
Ignition	Transistor Magneto Ignition
Starting	Recoil
Fuel Tank Capacity	3.1 L
Oil Capacity	0.5 L

6. Preparation for use

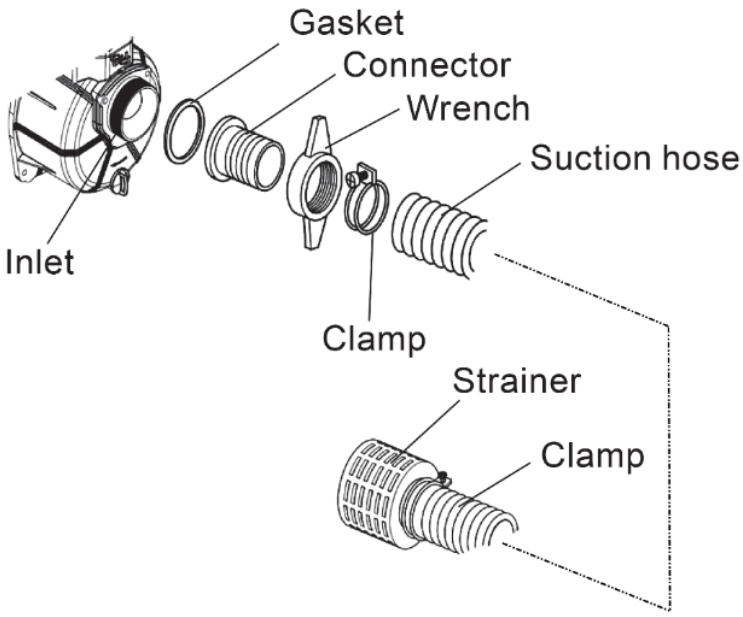

IMPORTANT: Install the strainer on the end of the suction hose before operation.
The strainer prevents foreign materials and protects the pump from blockages and component damage.

Fitting a foot valve (non-return valve) directly above the inlet strainer is strongly encouraged.

The pump is supplied without engine oil. Oil must be added before attempting to start the engine.

Before starting

Before each use, **check** the following:

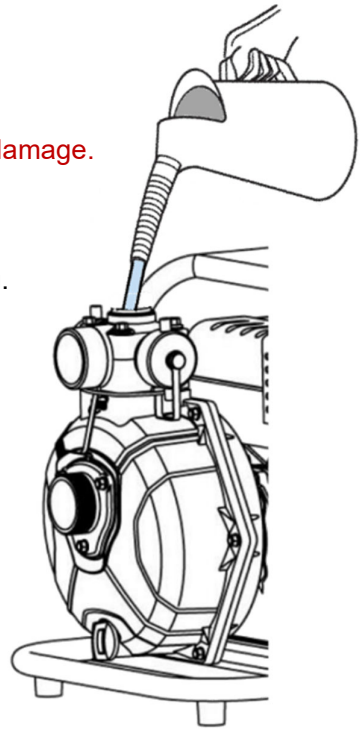

- Check the engine oil level.

Running the engine with insufficient oil can cause serious engine damage.

- Check the fuel level.
- Water MUST be added to the pump housing before starting.
  - A minimum of 2 litres is recommended. Filling fully with priming water is preferable.
  - Filling the suction line will assist the pump in achieving prime.
  - Running dry or without sufficient water will damage the mechanical seal quickly, voiding warranty.

Checking oil level

Every time, before use, check the oil level.
If the level is too low, the pump will not operate correctly.

When checking oil level, the pump must not be in operation and be on a level surface.

- Remove the oil dipstick from the oil filler and wipe it dry.
- Insert the dipstick into the oil filler (but don't screw it in) to check the oil level.
- If necessary, add oil until the level comes up to the upper-most position of the refilled mark taking care to not overfill, otherwise engine damage may occur.
- Insert the dipstick into the oil filler again and screw it in.

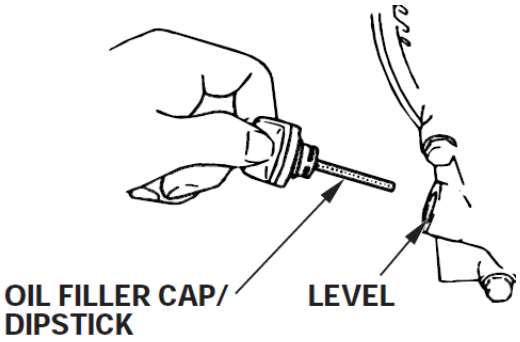

From empty, the crankcase requires 500mL of oil

IMPORTANT: The Oil Shortage Alarm System is designed to avoid engine damage due to insufficient lubricating oil. The system automatically shuts down the engine before the oil level drops to the minimum line of safety.

Recommended oil type

Use a high-detergent, premium-quality **SAE 10W-30** motor oil for 4-stroke engines.

- A different oil viscosity may be necessary according to the ambient temperature in your location.

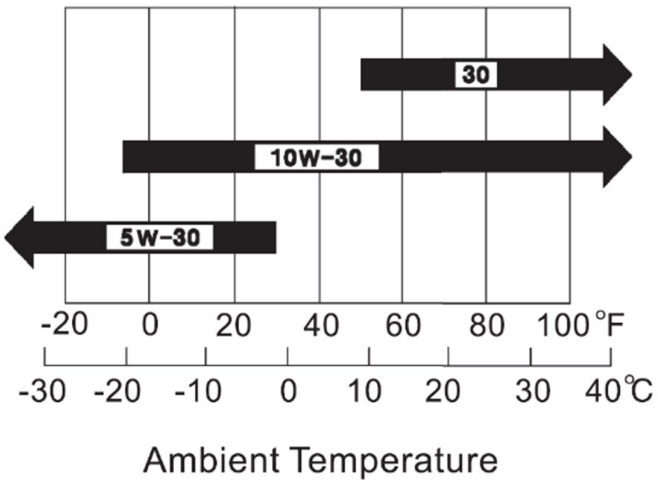

Checking fuel level

- Check the fuel level while the machine is stopped. Fill if necessary.
- Use fresh, unleaded, 91-octane petrol.
- **Take care** not to overfill the fuel tank above the maximum level indicator at the bottom of the fuel tank neck. This level provides room for fuel expansion.
- Wipe up any spilled petrol with a dry cloth immediately.

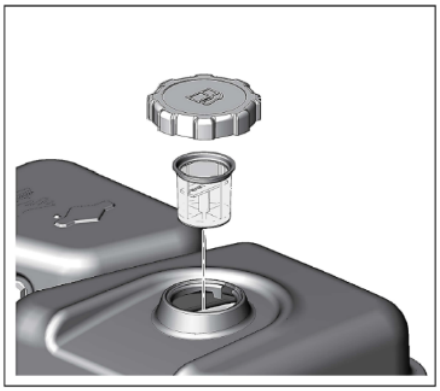

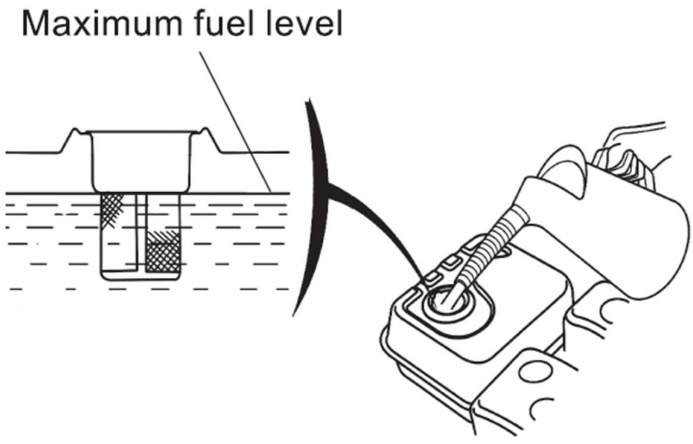

CAUTION: Ethanol blends greater than 10% are NOT to be used.

	Petrol is highly flammable and explosive. Always shut down this machine before refuelling. Refuel in a well-ventilated area. Make sure the filler cap is securely closed after refuelling.
	Avoid smoking or vaping and any open fire or sparks in areas where fuelling is carried out or fuel is stored.
	Wipe away any spilled petrol before starting this machine.

7. Starting

CAUTION:

- Confirm the engine oil level is correct.
- Check the fuel level.
- Confirm that water has been added in the pump.



1. Turn the fuel valve ON.



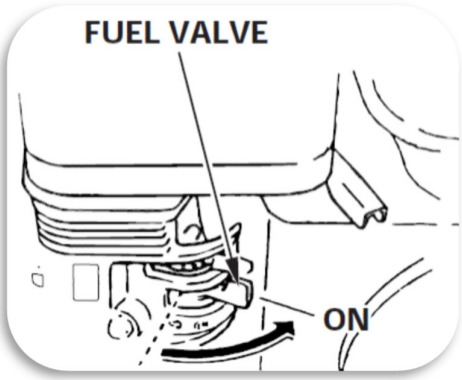

2. Close the choke lever.



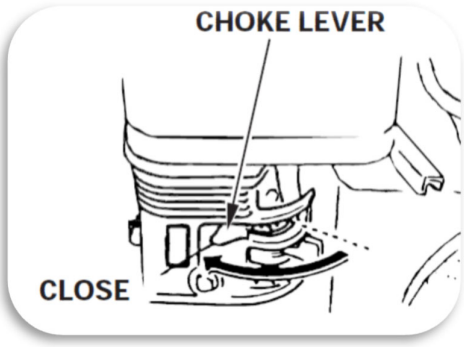

NOTE: When the engine is already warm or ambient temperature is high, it's not essential to close the choke lever.

3. Move the throttle lever slightly to the left.

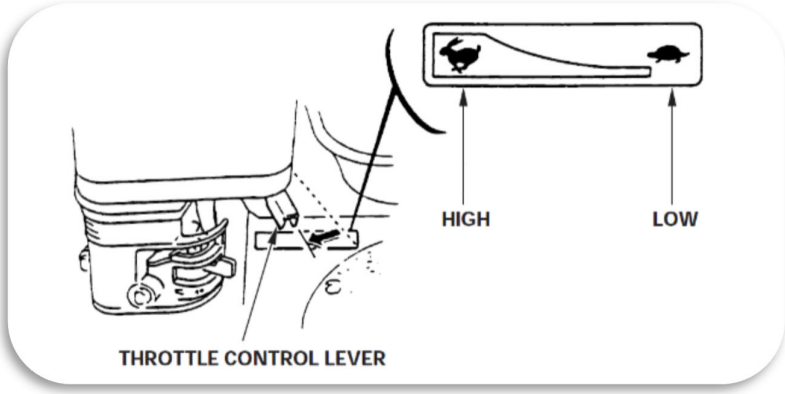

4. Turn the engine switch to the ON position.

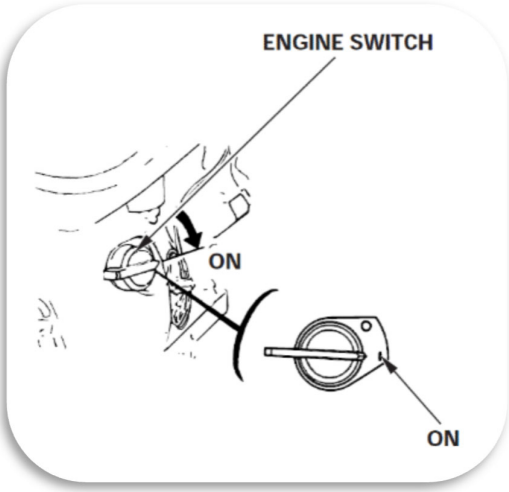

5. Pull the starter handle lightly until resistance is felt, then pull briskly.



CAUTION: Return the starter handle gently to the starter. Do not allow it to snap back against the engine.

8. Operation

ACHIEVING PRIME: Water Master engine-driven pumps are designed for efficient self-priming operation.

Note that initial priming may require multiple attempts, particularly in challenging installations.

Long suction lines or significant suction lifts mean there's a larger volume of air that must be expelled before the pump can establish flow.

If the pump doesn't prime on the first attempt, stop and allow it to rest briefly before trying again. This process may need to be repeated several times – this is normal, not a fault.

During each attempt, the pump progressively displaces air from the suction line until enough water reaches the impeller to establish continuous flow.

Patience during initial start-up will be rewarded with reliable operation once prime is achieved.

---

1. As the engine warms up, gradually move the choke lever to the OPEN position.

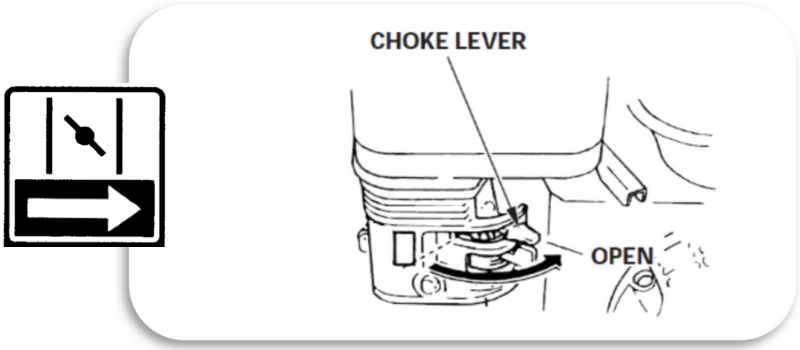

2. Position the throttle control lever for the desired engine speed.

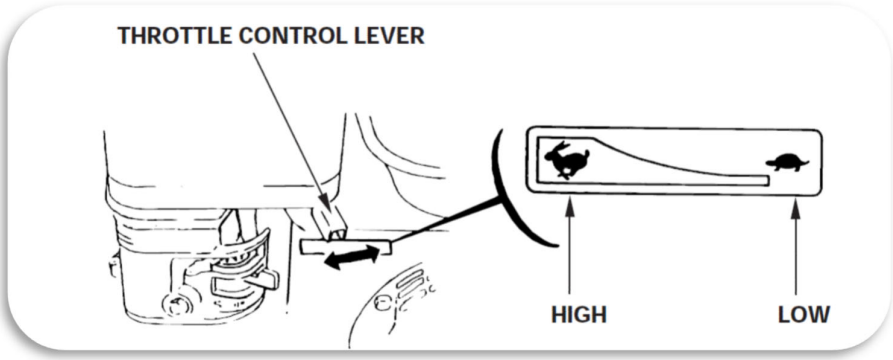

9. Stopping

In an emergency, immediately turn the engine switch to the OFF position to shut down the engine.

1. Move the throttle control lever fully to the right.

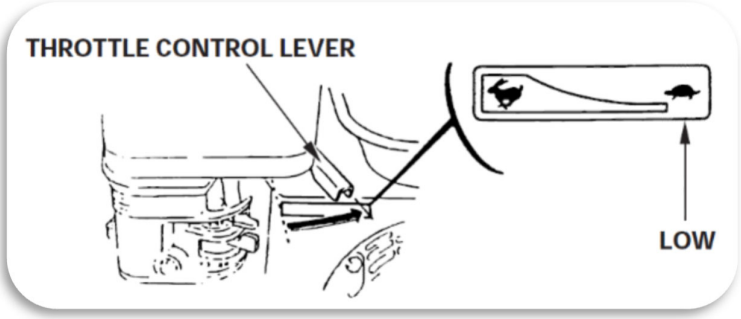

2. Turn the engine switch to the OFF position.

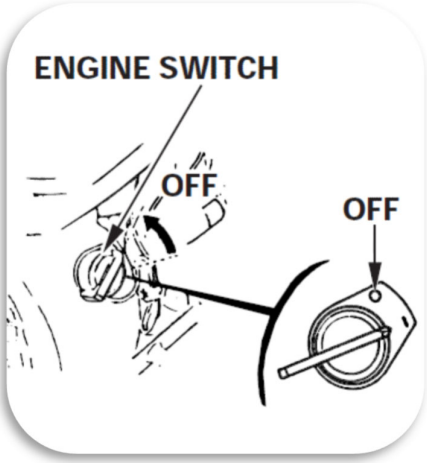

3. Turn the fuel valve OFF.



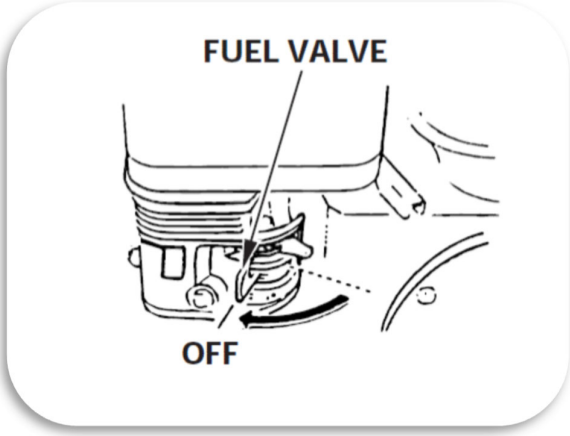

10. Tips for use

Before starting, the pump chamber must be filled with liquid in order to prime.
Filling the suction line will assist the pump in achieving prime.

Running the pump dry risks damage to internal components

Fitting a valve to the discharge line allows for flow control to minimise cavitation.

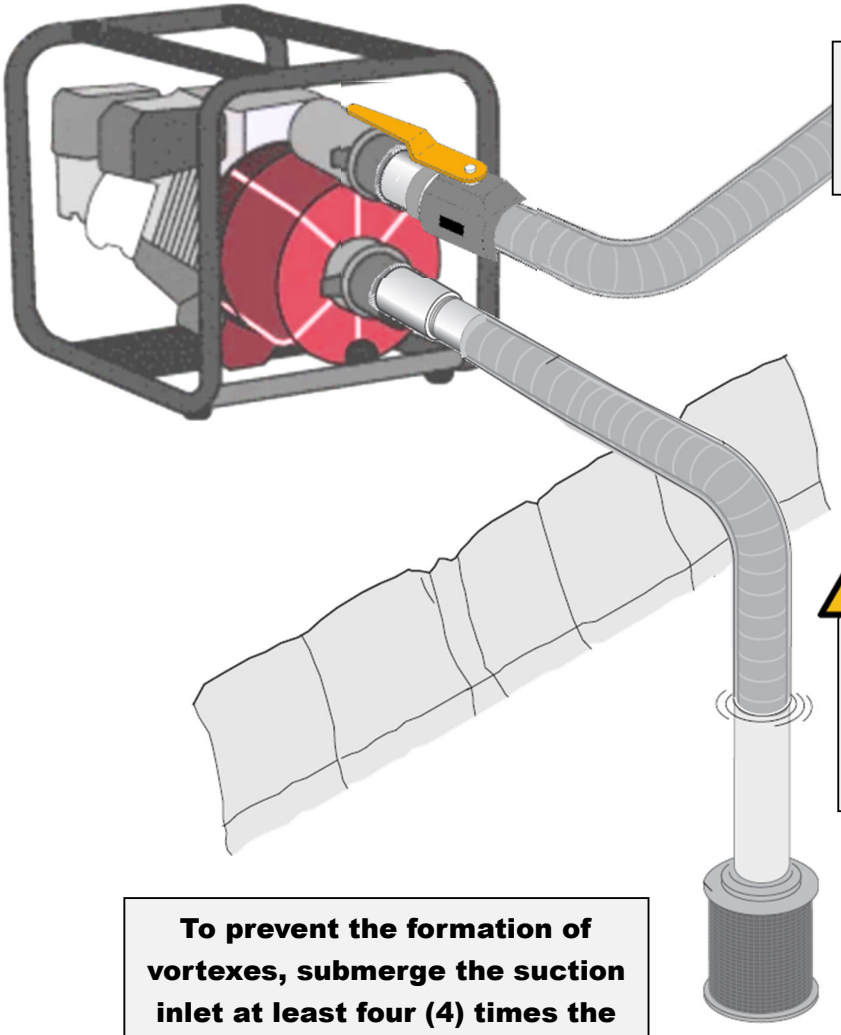

Discharge pipe should not be smaller than the pump discharge.

Fitting a foot valve (non-return valve) directly above the inlet strainer is strongly encouraged.

To prevent the formation of vortexes, submerge the suction inlet at least four (4) times the diameter of suction pipe.

Suction screen area must be at least four times suction pipe area.

11. Maintenance

REGULAR SERVICE PERIOD		Each time	20 Hrs or first month	50 Hrs or every 3 months	100 Hrs or every 6 months	300 Hrs or every year
Engine oil	Check level	●				
	Change		●		●	
Air cleaner element	Check	●				
	Clean			●		
	Change					●
Fuel sediment cup	Clean				●	
Spark plug	Clean				●	Change
Valve clearance	Readjust					●
Fuel tank and fuel filter	Clean	Every 2 years				
Fuel line	Change	Every 2 years (between fuel tank and carburetor)				

A dirty air cleaner will restrict air flow to the carburettor and result in reduced pump power.

It is important to clean the air filter regularly, more-so when the pump is used in dusty conditions. Replace the paper filter element after every 300 hours of use.

Never run the pump without an air cleaner or with a damaged air cleaner. Dirt or dust sucked into the engine will accelerate engine wear.

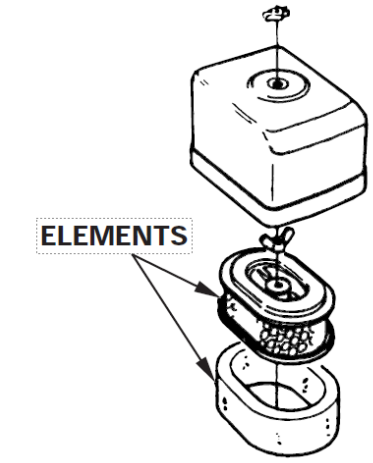

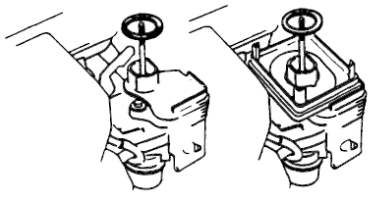

Paper filter element cleaning:

Tap the filter element a few times, then blow from the inside with compressed air (pressure < 2 bar). Never attempt to clean the filter element with brush as it will block the passages of the element.

Foam filter element cleaning:

Wash the element in hot water with detergent or in a non-flammable or high flash point solvent. Let it dry thoroughly and immerse into clean oil, then squeeze out the excess oil.

Clean the lower part of air cleaner, air cleaner cover and rubber gasket.

Combine the filter element and foam filter element and reinstall.

If the engine has been running, the muffler will be very hot.
Be careful not to touch the muffler.

Spark plug maintenance

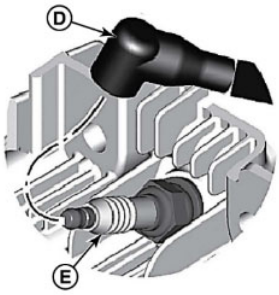

Recommended spark plug: **BPR6ES (NGK), W20EPR-U (DENSO)** or equivalent.

1). Remove the plug cap [D].

2). Use a plug spanner to loosen the spark plug [E] and remove

3). Visually check the spark plug. Discard if the electrode or insulation ring is damaged or the insulator is broken or cracked.

Check the plug gap [A] with a feeler gauge [B]. The gap should be **0.70–0.80mm**. Vary the gap by moving the side electrode if necessary.



4). Thread the plug in by hand to prevent cross-threading.

5). Use the spark plug spanner to tighten the plug. When reinstalling a used spark plug, tighten 1/8—1/4 turn after the spark plug seats to compress the washer. For a new spark plug, tighten 1/2 turn after the spark plug seats to compress the washer.

6). Reinstall the spark plug cap.

Changing the engine oil

The first oil change is especially important. Small engines do not have an oil filter, so any fine metal particles from the running-in period remain in the oil. Changing the oil early removes these particles and helps ensure long engine life.

To ensure rapid and complete draining, warm up the engine before draining the oil.

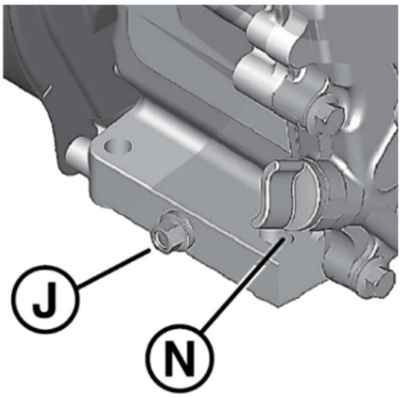

1). Remove the oil dipstick [N] and the drain screw [J], then drain the oil into a tray or other container.

2). Reinstall the drain screw and tighten it.
Ensure its sealing washer is in place.

3). Place the engine in a level position and refill with the correct oil (max. 500mL).

4). Reinstall the oil dipstick and tighten it.



Dispose of used engine oil in accordance with local regulations.
Waste oil should be taken to an approved recycling or disposal facility.
Never discard oil in household waste, drains, or the environment.

12. Storage

Wait at least 30 minutes after the pump stops to ensure it has fully cooled down.

Clean the pump and apply corrosion inhibitor if necessary.



Take care when pressure washing as water may enter the air filter or muffler, or even to migrate into the engine cylinder which will result in corrosion damage.

Storing a pump with fuel in the tank for long periods is NOT recommended. Over time, fuel goes stale which can lead to clogging in the fuel lines and carburettor.
Both issues can result in a pump which is hard to start and rough running.



Recommendations before longer term storage

1). The storage area should be secure and dry, free of moisture and dust.

2). Drain all the fuel.

- a. Turn off the fuel valve and remove the drain screw.
- b. Turn on the fuel valve and drain the fuel into a suitable container.
- c. Reinstall the drain screw.

3). Drain the engine oil and replace with fresh oil.

4). Upper cylinder corrosion can be prevented by:

- a). Remove the spark plug.
- b). Pour one teaspoon of clean engine oil (5–10mL) into cylinder.
- c). Pull the starter cord to distribute the oil inside the cylinder.
- d). Reinstall the spark plug.
- e). Pull the starter handle slowly until a resistance is felt. In that case, both the inlet valve and outlet valve are closed.

5). Ensure the pump body is fully drained.

6). Cover the pump to prevent dust buildup.

13. Troubleshooting

These pumps are ‘self-priming’ types capable of drawing water from the source up to the inlet but only if there is water already in the pump.

To maximise the pump output:

- Place the pump as close to the water source as possible.
- Use hoses which are no longer than necessary.
- The suction line should be equal in diameter (or one size large) than the pump inlet.
- Suction lines should be as short and straight as possible.
- Use ‘suction-rated’, preferably smooth-bore intake piping.

Minimizing suction head (placing the pump near the water level) is very important for reducing self-priming time (the time it takes the pump draw water during initial operation)

Excessive suction requirements, i.e.:
- Suction line too small
- Suction line too long
- Vertical distance to pump inlet too great

All these reduce the amount of flow the pump can deliver before the onset of cavitation.

Cavitation makes a very distinctive sound (gravel in the wet end) and is highly destructive. If cavitation occurs, restrict the outlet of the pump or reduce the suction requirement.

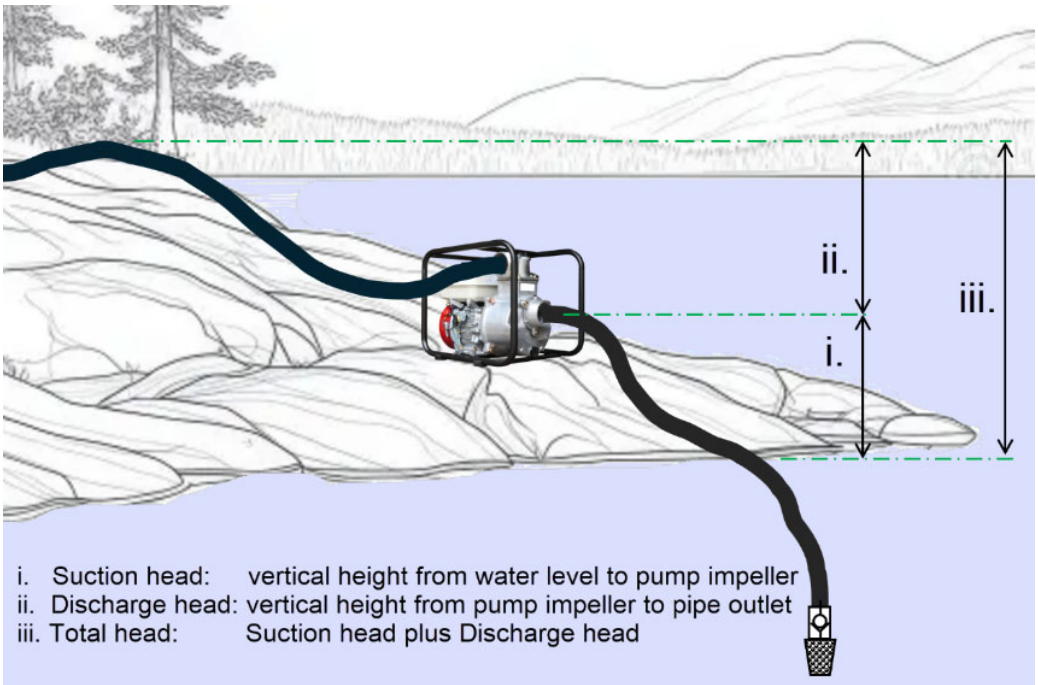

General guideline:

A pump generating 3m of suction can only deliver approx. 80% of its full rated flow.
A pump generating 5m of suction can only deliver approx. 68% of its full rated flow.

SYMPTOM	PROBABLE CAUSE															
	ENGINE				PUMP						SYSTEM					
	A	B	C	D	E	F	G	H	I	J	K	L	M	N	O	P
No water delivered					■	■	■				■	■	■			■
Not enough water delivered	■						■	■			■	■	■			■
Not enough pressure	■						■	■			■	■	■			
Engine heats excessively		■	■					■	■	■		■		■		
Abnormal noise and/or vibration				■	■		■			■		■	■	■		
Pump works, then stops				■			■			■			■		■	■

CAUSE	CORRECTIVE ACTION
ENGINE	
A. Speed too low.	Refer to engine section.
B. Rotating and/or reciprocating parts drag.	Refer to engine section.
C. Speed too high.	Maximum rpm not to exceed engine manufacturer's recommendation.
D. Loose or broken parts.	Refer to engine section.
PUMP	
E. Not primed.	Reprime, inspect suction system for air leaks, and/or check assembly.
F. Pump takes too long to prime.	Check for air leaks or defective check valve.
G. Flow through pump completely or partially blocked	Locate and remove obstruction. Attach strainer.
H. Internal leakage.	Check pump internals for damage or wear
I. Rotating parts drag.	Inspect. Repair.
J. Loose or broken parts.	Inspect. Repair.
SYSTEM	
K. Pressure required by system at the design flow rate is greater than the output of the pump.	Compare pump pressure and flow rate against pump performance chart. Reduce system pressure requirement. Increase pressure capability of pump.
L. Obstruction in suction piping.	Locate and remove obstruction. Attach strainer.
M. Suction lift too high.	Check with gauge or measure vertical distance between water surface and center line of pump, allowing for friction loss in suction pipe. Reduce rate of flow to obtain desired lift.
N. Discharge head too low.	Decrease rate of flow.
O. Suction inlet not immersed deep enough.	Ensure suction inlet is more than 150mm beneath the water
P. Suction line or connection admitting air.	Repair or replace suction line. Tighten connections.

The engine will not start:

1. Is there fuel in the tank full
2. Is the fuel valve ON?
3. Has the fuel reached the carburettor?

To check, remove the fuel drain screw and turn the fuel valve on.

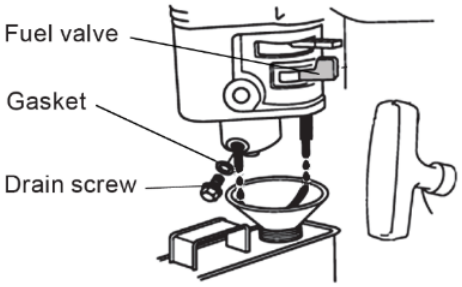

4. Is the engine switch ON?
5. Is there enough engine oil?
6. Is the spark plug generating sparks?



- Uninstall and check the spark plug, clear off the dirt from around the plug and dry it.
- Fit the spark plug into the plug cap
- Place the spark plug thread onto the engine to create an earth
- Pull the recoil starter and watch the spark plug electrode for sparks.
- Replace the spark plug if necessary.

CRITICAL IMPORTANCE OF AIRTIGHT SUCTION LINES



Any air leaks in the suction line will severely compromise (or completely prevent) the pump's ability to prime and maintain flow.

Even small leaks that seem insignificant under positive pressure become critical problems under the vacuum conditions created on the suction side.
Check all connections, gaskets, and seals in the suction line carefully before installation. Pay particular attention to threaded joints, flanges, and the foot valve connection. A suction line that isn't completely airtight will allow air to be continuously drawn in, making it impossible for the pump to develop the necessary vacuum to lift water.

If priming difficulties persist after multiple attempts, inspect the entire suction line for air leaks before assuming a pump fault.

14. Warranty – General Understanding

Warranty applies to manufacturing or material defects.

The unit must always be handled correctly according to instruction manual.
The unit must not have been modified or have been repaired by any person other than authorized service agents.

Warranty no longer applies in the following cases:

- Non-compliance with the instructions especially non-protection against freezing, pumping sand or dry running
- After attempting to repair the unit
- Changes in the technical elements of the pump
- Use of replacement parts other than original
- Damage / malicious (dropping or external damage
- Inappropriate use (e.g., industrial, continuous operation), and in particular passage of hard and heavy particles (stones, or sticks), passage of an excessive amount of sand, salt water, water with high lime content, liquid with a high vegetable matter content, i.e. grass or leaves
- Lack of maintenance or cleaning

A repair or exchange with a new product during the warranty period does not extend the original warranty period.

Any claim against warranty is on a 'return to base' basis and must be accompanied by all accessories. Proof of purchase and proof of sale will be required along with a full and clear explanation of the issue or observed symptoms/behaviours.

15. Warranties – Terms and Conditions

This warranty is given in addition to the consumer guarantees found within the Australian Competition and Consumer Act 2010 (Cth) for goods purchased in Australia and the Consumer Guarantees Act 1993 NZ for goods purchased in New Zealand:



COMPONENTS ENGINE

1) White International Pty Ltd / White International NZ Ltd (White International) warrant that all products distributed are free from defects in workmanship and materials, for their provided warranty period as indicated on the top or opposite side of this document. Subject to the conditions of the warranty, White International will repair any defective products free of charge at the premises of our authorised service agents throughout Australia and New Zealand if a defect in the product appears during the warranty period. If you believe that you have purchased a defective product and wish to make a claim under this warranty, contact us on our Sales Hotline on 1300 783 601, or send your claim to our postal address or fax line below and we will advise you as to how next to proceed. You will be required to supply a copy of your proof of purchase to make a claim under this warranty.

2) This warranty excludes transportation costs to and from White International or its appointed service agents and excludes defects due to non-compliance with installation instructions, neglect or misuse, inadequate protection against the elements, low voltage or use or operation for purposes other than those for which they were designed. For further information regarding the suitability of your intended application contact us on our Sales Hotline on 1300 783 601. If you make an invalid claim under this warranty, the original product will be sent back to you unrepaired.

3) This warranty refers only to products sold after the 1st January 2012, and is not transferable to another product type and only applies to the original owner, purchaser or end user, and is in addition to the consumer guarantees found within the Competition and Consumer Act 2010 (Cth) for goods purchased in Australia and the Consumer Guarantees Act 1993 (NZ) for goods purchased in New Zealand.

4) Our goods come with guarantees that cannot be excluded under the Australian Consumer Law. You are entitled to a replacement or refund for a major failure and for compensation for any other reasonably foreseeable loss or damage. You are also entitled to have the goods repaired or replaced if the goods fail to be of acceptable quality and the failure does not amount to a major failure

5) To the fullest extent permitted by law, White International excludes its liability for all other conditions or warranties which would or might otherwise be implied at law. To the fullest extent permitted by law, White International's liability under this warranty and any other conditions, guarantees or warranties at law that cannot be excluded, including those in the Competition and Consumer Act 2010 (Cth), is expressly limited to: (a) in the case of products, the replacement of the product or the supply of equivalent product, the payment of the cost of replacing the product or of acquiring an equivalent product or the repair of the product or payment of the cost of having the product repaired, is at the discretion of White International or a 3rd party tribunal elected under the Competition and Consumer Act 2010 (Cth) for goods purchased in Australia and the Consumer Guarantees Act 1993 (NZ) for goods purchased in New Zealand; and

6) To the fullest extent permitted by law, this warranty supersedes all other warranties attached to the product or its packaging.

7) In the case of services, supplying the services again or the payment of the cost of having the services supplied again, is at the discretion of White International or a 3rd party tribunal elected under the Competition and Consumer Act 2010 (Cth) for goods purchased in Australia and the Consumer Guarantees Act 1993 (NZ) for goods purchased in New Zealand.

8) Our warranty commences from the date of purchase of the above-mentioned products. Proof of purchase is required before consideration under warranty is given.

Print a copy of this page and record your date of purchase in the space below.
Retain the printed copy along with your purchase receipt for your records.

Date of Purchase ..... **Model Purchased** .....

Distributed By:
WHITE®
INTERNATIONAL

www.whiteint.com.au

www.whiteint.co.nz

Please always refer to our website for further technical information & new product innovations

Disclaimer: Every effort has been made to publish the correct information in this manual. No responsibility will be taken for errors, omissions or changes in product specifications.

© 2025 Copyright White International Pty Ltd

TM ® - WARNING: Please be aware that various brands & products depicted within this document are subject to trademark, patent or design registrations. Infringement of any intellectual property contained within this document without express written authority by the appropriate intellectual property holder may result in further legal action to be taken. For any queries regarding use of the contained information please feel free to contact White International Pty Ltd.