BIANCO NXT pumps

PRODUCT DATA SHEET

RAINSAVER MK6 KIT

RS6-INOX60S2CORE • 804715

WaterMark

ATS5200.477:2006

License No. 23022

Approved for Drinking Water AS/NZS 4020





PRODUCT DETAILS

The Bianco NXT INOX60 is a stainless steel jet pump with an internal venturi which enables water to be drawn from below ground level.

Paired with a Rainsaver Mk6 automatic changeover device, this kit provides automatic mains backup for pressure-pump supply systems.

The pump-mounted NXT CORE controller features dry-run protection. To prevent aerated water entering the property, a low-level float is recommended.

APPLICATIONS

- Household water supply – small-to-medium homes
- Moderate irrigation
- Clean water

PUMP FEATURES

- Automatic On/Off – 2.2bar start pressure
- Dry-run protection
- Inbuilt auto-reset thermal overload
- Corrosion-resistant components
- High-quality bearings and mech. shaft seal
- 240V single-phase TEFC motor

BIANCO NXT 3 YEAR WARRANTY

NXT · RAIN 2 YEAR INFIELD WARRANTY

PUMP TECHNICAL DATA

OUTPUT POWER (P2)	0.60 kW
MAX. HEAD [M]	43 m
MAX. FLOW [LPM]	62 L/min
MAXIMUM PRESSURE	Pump 8 bar, Controller 10 bar
LIQUID TEMPERATURE	2 – 40°C
MOTOR	Asynchronous TEFC
MOTOR INSULATION	F Class
MOTOR PROTECTION	Inbuilt thermal overload
PROTECTION CLASS	IPX5
PRESSURE TANK	3, 8 or 18L recommended

RATED VOLTAGE	220–240V 1ph 50Hz
RATED CURRENT	4 A
CAPACITOR	16µF 450Vc
POWER CABLE	1.5m long 10A-rated H05 flex 10A 3-pin plug
AUTOMATIC OPERATION	Yes – NXT CORE
PUMP BODY	304 Grade Stainless Steel
INTERNALS	Composite impeller / diffusers
MECHANICAL SEAL	Silicon Carbide/Carbon
PACKAGE DIMENSIONS	420 x 230 x 460mm
GROSS WEIGHT (KG)	11.5 kg

BIANCO NXT rainsaver

PRODUCT DATA SHEET

RAINSAVER MK6 KIT

RS6-INOX60S2CORE • 804715

WaterMark

ATS5200.477:2006

License No. 23022

Approved for Drinking Water AS/NZS 4020

2 YEAR NXT · RAIN INFIELD WARRANTY

IP68



PRODUCT DETAILS

The RAINSAVER MK6 is an Automatic Rainwater / Mains-water Changeover Device designed to provide automatic mains backup for pressure-pump supply systems.

The RAINSAVER MK6 is designed to be installed with a pressure pump supply system that is fitted with an independent pressure and flow controller with loss-of-prime protection and 24h auto-restart.

OPERATION

The RAINSAVER MK6 supplies clean rainwater from a rainwater tank via an automatic pressure-pump system to toilets, laundry and garden taps in a household.

Mains water is also connected to the RAINSAVER MK6 as an automatic backup should the rainwater level be too low, or if there is a power or pump failure.

When the rainwater supply is replenished and auto-restart has commenced, or power is restored to the pump, the pump will pressurise the RAINSAVER MK6 and the unit will switch back automatically to supplying tank water.

Primary Operating Principle: The Mk6 operates according to hydraulic differential, but incorporates a pressure-limiting valve (200kPa). Supplied as part of a kitset, matched to a pump with the correct performance.

TECHNICAL DATA

MAX. RECOMMENDED PUMP FLOW	120 L/min
MAXIMUM PRESSURE RATING	1000 kPa
MAX. MAINS INLET PRESSURE	550 kPa
RATED PUMP FLOW RATE	Pump model dependent
MAX. WATER TEMPERATURE	40°C
MIN. WATER TEMPERATURE	≥ 4°C*
PUMP INLET	25mm 1” BSP F
MAINS WATER INLET	20mm 3/4” BSPM
OUTLET	20mm 3/4” BSPM
WEIGHT	0.5 kg
*Ensure proper protection against freezing weather	

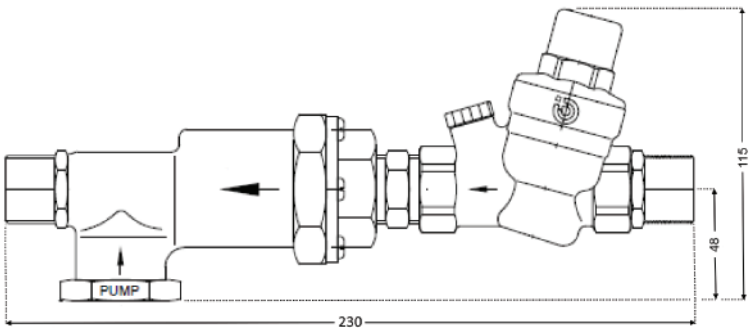

PRODUCT DATA SHEET

RAINSAVER MK6 KIT

RS6-INOX60S2CORE • 804715

DIMENSIONS

Height incl Controller
Approx 405mm

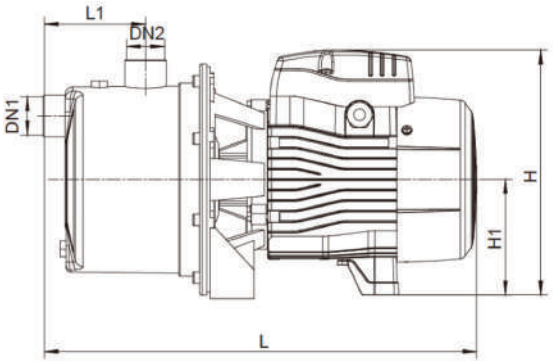

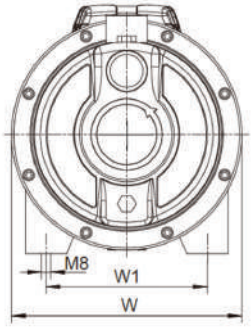

Model	DN1	Dn2	L (mm)	W (mm)	H (mm)	L1 (mm)	W1 (mm)	H1 (mm)
Inox 60	G1"	G1"	385	205	200	100	140	95

PUMP HYDRAULIC CURVE

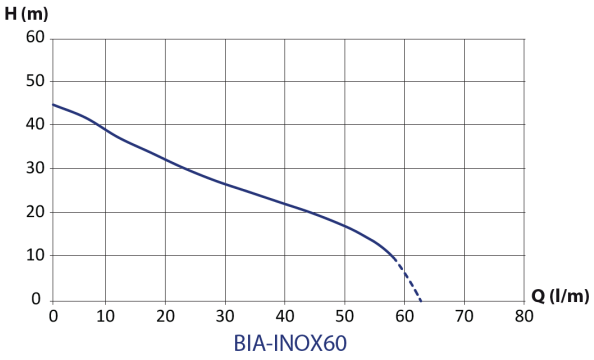

BIA-INOX60

RAINSAVER INSTALLATION

